QLS - quick connection guide
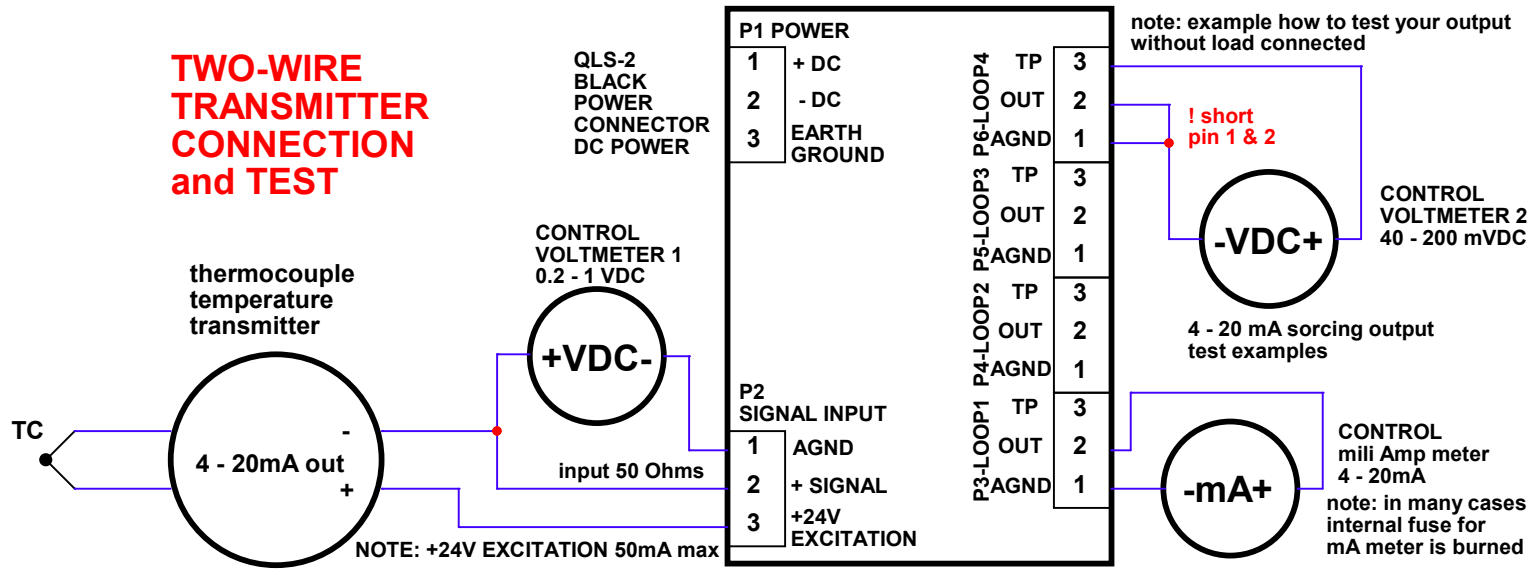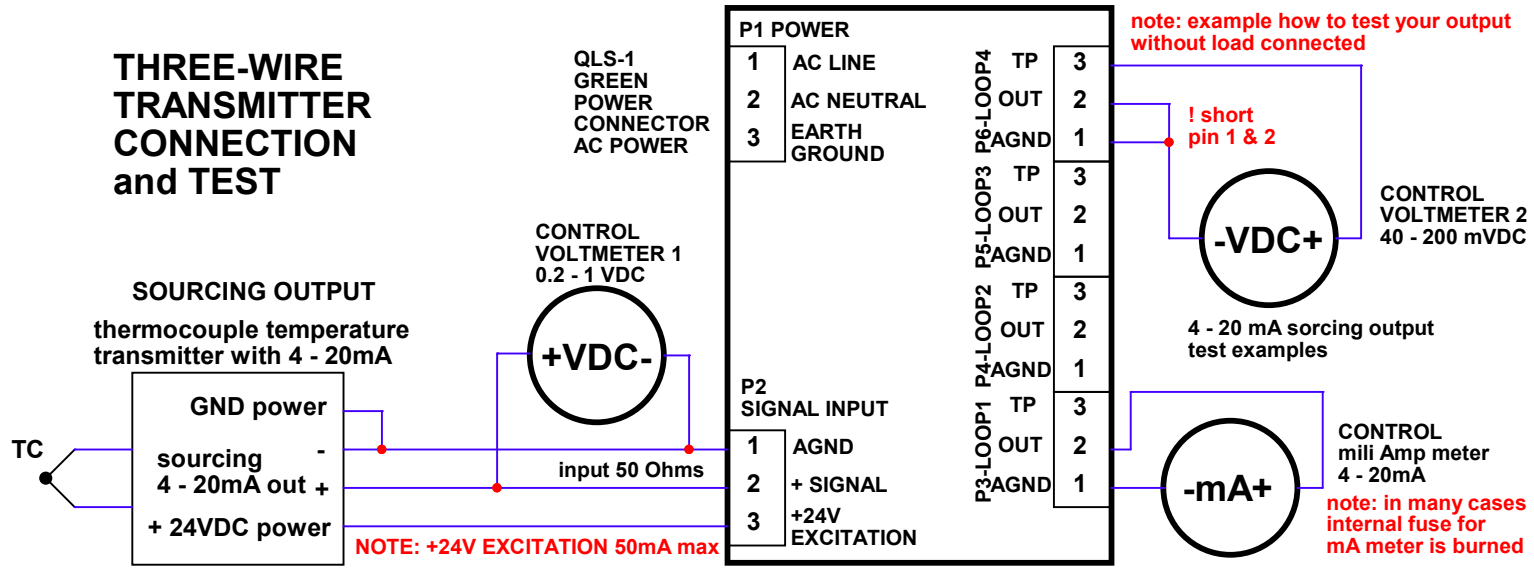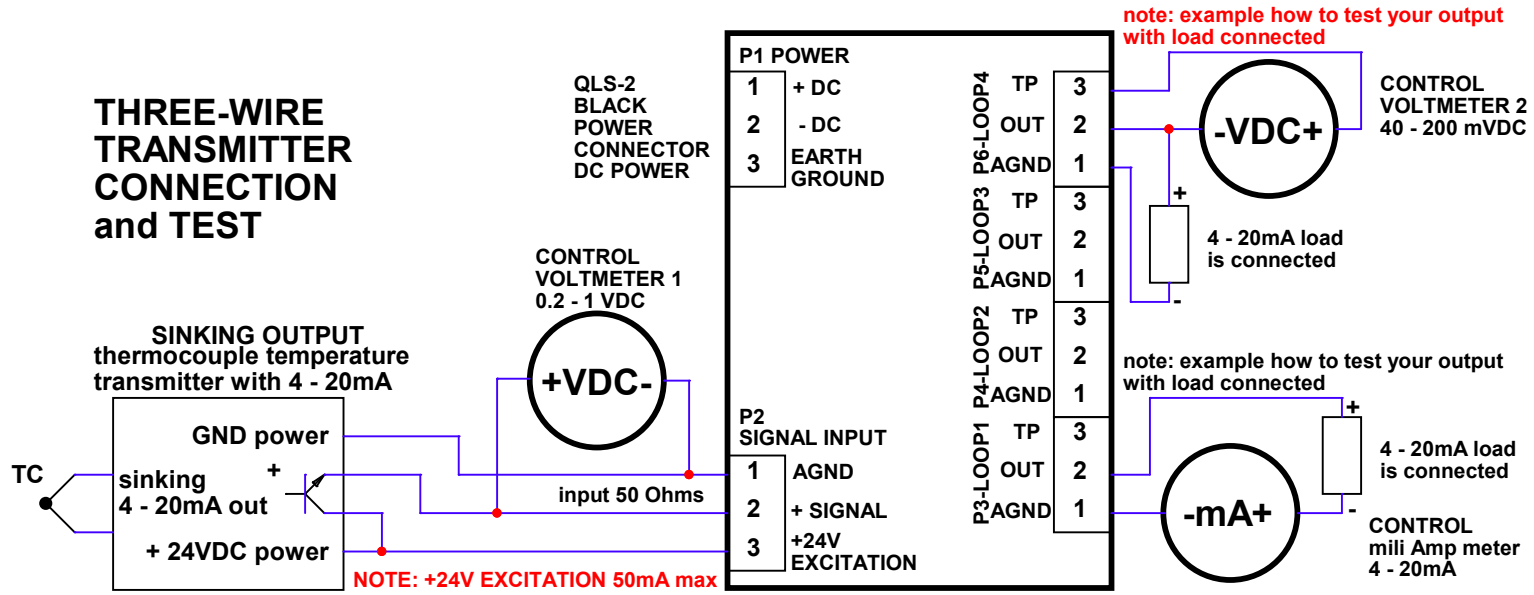
1. Power connector P1 - POWER, GREEN 85-264VAC or 90-300VDC, BLACK 10-48VDC or 12-32VAC
2. Check the jumper settings
3. If the jumper settings are set for 4..20mA, the input resistance should be 50 Ohms.
   How to measure it?
   Disconnect all wires to QLS and measure input resistance - pin1 and pin2 on P2 - SIGNAL INPUT.
4. If all measurements are in the range, call us for help, but be ready with below measurements